M-Classic Pump

Max. vacuum level : **-92 kPa** (-27.17 inHg)

Max. flow rate : **1580 Nl/min** (55.8 scfm)

Supply air pressure : **4~6bar, max 7bar** (58~87 psi, max 101.5psi)

Supply air type : Dry compressed air

Working temperature : -20℃ ~ 80℃

Noise level : 50~65 dBA

Main Advantages

This Classic VTM pump is probably the most commonly used multi Stage ejector it is available in a large range of sizes and configurations. Each pump comes complete with an exhaust silencer, gauge and fixing brackets. The body whilst robust is also lightweight. The housings are manufactured from PPS high grade plastic, which means most hazardous vapors, can be accommodated. Pump sizes range from a VTM25 to the high flow VTM200.
All units are available with the option of an air saving kit and non-return valves. Viton® and EPDM seals can also be stipulated as options.

Order No.

VTM25 - 1434 A - AS - A3 R3 - CL SG2 N V

① ② ③ ④ ⑤ ⑥ ⑦ ⑧ ⑨

① Model – Capacity equivalent to electricity motor pump size

•	**VTM25**	– 0.25KW
	VTM50	– 0.50KW
	VTM75	– 0.75KW
	VTM100	– 1.00KW
	VTM125	– 1.25KW
	VTM150	– 1.50KW
	VTM175	– 1.75KW
	VTM200	– 2.00KW

② Connection plate

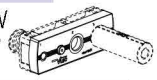

	Air port	Vacuum port	
1412 A	G1/4″	G1/2″	Aluminum
• **1434 A**	G1/4″	G3/4″	Aluminum
1401 A	G1/4″	G1″	Aluminum
N1412 A	NPT1/4″	NPT1/2″	Aluminum
N1434 A	NPT1/4″	NPT3/4″	Aluminum
N1401 A	NPT1/4″	NPT 1″	Aluminum
1812 P	G1/8″	G1/2″	All PPS
1834 P	G1/8″	G3/4″	All PPS
N1812 P	NPT1/8″	NPT1/2″	All PPS
N1834 P	NPT1/8″	NPT3/4″	All PPS

※ Remark :
- Air supply port with air control valve or AS-kit
  VTM25~VTM150 : G1/4″
  VTM175~VTM200 : G3/8″
- PPS Mat'l is available in VTM25 ~ VTM125

③ Air saving Kit (108)

	No mark	– Standard
•	**AS**	– Air saving kit attached

④ Air supply control valve

	A1	– AC 110V
	A2	– AC 220V
•	**A3**	– DC 24V
	D1*	– AC 110V
	D2*	– AC 220V
	D3*	– DC 24V

D..* : Double solenoid valve
Double solenoid valve is available only with 'DN' or 'DL', section ⑥

⑤ Vacuum release control valve

	R1	– AC110V
	R2	– AC220V
•	**R3**	– DC24V

⑥ Solenoid Terminal

	DN	– DIN type without lead wire
	DL	– DIN type with lamp without lead wire
•	**CL***	– Connector type with lamp & 0.3m lead wire
	2B*	– DIN type with '2 in 1' BUS cable (Air control v/v + Vacuum release v/v)
	3B*	– DIN type with '3 in 1' BUS cable (Air control v/v + Vacuum release v/v + Digital switch)

* Can not available with double solenoid valve
※ Remark
CL : Available only with DC24V
Can not available with VTM175, VTM200
3B : Available only with DC24V
Available only with 'S2' or 'S2P', section ⑦
☞ About 'BUS cable' (340, 341)

⑦ Vacuum switch

	S2(P)	– Digital output 2points, No analog supply M8-4Pin male connector (0.3m lead wire)
•	**SG2**(P)	– Digital output 2points, No analog supply Grommet type 4-core 2m lead wire
	SG3(P)	– Digital output 2points, Analog supply Grommet type 4-core 2m lead wire

※ Remark : ① S..(P) → Output type : PNP open collector.
② VCM8 42 : M8-4Pin female connector. only for type S2(P)

⑧ Non-return valve

	No mark	– Standard
•	**N**	– Non-return valve

⑨ Sealing

	No mark	– Standard (NBR)
•	**V**	– Viton®
	E	– EPDM

Characteristics

Model	max. vacuum -kPa(-inHg)	Max. vacuum flow (Nl/m)	air consumption (Nl/m)	noise level (dBA)	weight (g)	min hose inner Ø (within 2m)		
						air supply	vacuum	exhaust
VTM25	92 (27.17)	389	78–108	50 – 65	620	〉4	〉12	〉12
VTM50		647	150–210	50 – 65	622	〉6	〉15	〉15
VTM75		890	228–318	50 – 65	794	〉8	〉19	〉22
VTM100		1100	300–420	50 – 65	795	〉8	〉19	〉22
VTM125		1200	378–528	60 – 65	936	〉10	〉25	〉32
VTM150		1380	450–630	60 – 65	947	〉10	〉25	〉32
VTM175		1490	528–738	60 – 65	1148	〉10	〉32	〉40
VTM200		1580	600–840	60 – 65	1150	〉12	〉32	〉40

Vacuum flow in (Nl/m) at different Vacuum level (-kPa)

Model \ -inHg / -kPa	0 / 0	2.95 / 10	5.9 / 20	8.85 / 30	11.81 / 40	14.76 / 50	17.71 / 60	20.67 / 70	23.62 / 80	26.57 / 90
VTM25	389	220	147	74	37	27	18	10	5	0.8
VTM50	647	400	279	146	73	54	36	20	10	1.6
VTM75	890	600	366	220	110	82	54	30	15	2.4
VTM100	1100	750	453	291	146	109	72	40	20	3.2
VTM125	1200	900	530	356	182	135	90	50	25	4
VTM150	1380	1020	597	416	218	162	108	60	30	4.8
VTM175	1490	1120	654	471	254	189	126	70	35	5.6
VTM200	1580	1200	701	521	290	216	144	80	40	6.4

Time in seconds to evacuate to vacuum level (sec/l)

Model \ -inHg / -kPa	2.95 / 10	5.9 / 20	8.85 / 30	11.81 / 40	14.76 / 50	17.71 / 60	20.67 / 70	23.62 / 80	26.57 / 90
VTM25	0.019	0.048	0.11	0.239	0.416	0.686	1.122	1.91	4.21
VTM50	0.012	0.03	0.066	0.125	0.209	0.345	0.593	1.05	2.19
VTM75	0.009	0.023	0.05	0.094	0.157	0.259	0.445	0.788	1.644
VTM100	0.006	0.015	0.033	0.063	0.105	0.173	0.297	0.526	1.097
VTM125	0.0055	0.0143	0.0311	0.055	0.092	0.151	0.260	0.46	1.96
VTM150	0.0052	0.0135	0.0296	0.047	0.078	0.129	0.223	0.394	0.823
VTM175	0.005	0.0127	0.0279	0.039	0.065	0.108	0.186	0.329	0.686
VTM200	0.0048	0.0113	0.0258	0.027	0.054	0.09	0.153	0.274	0.67

Dimensional Information

Standard

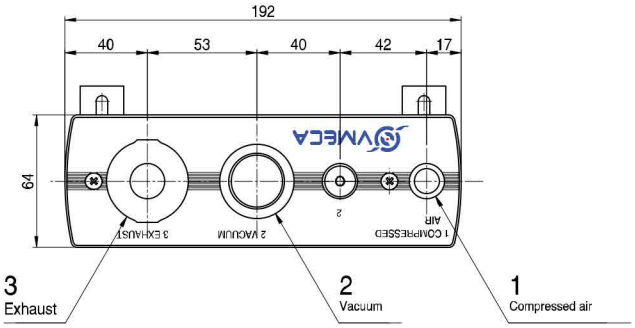

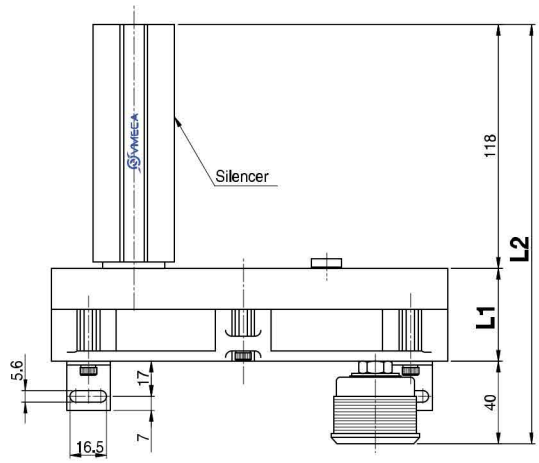

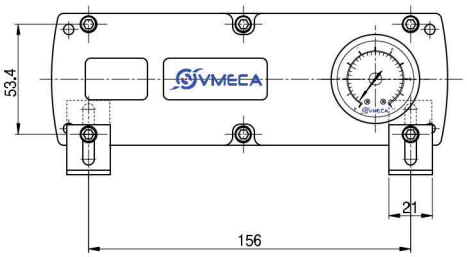

with AS - KIT

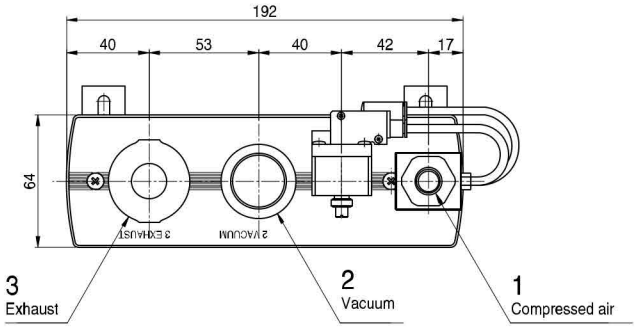

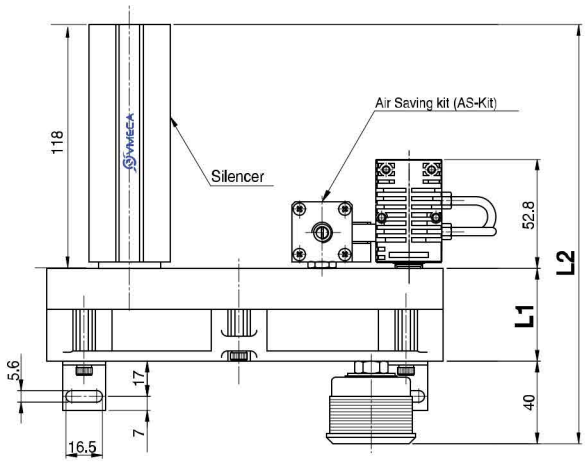

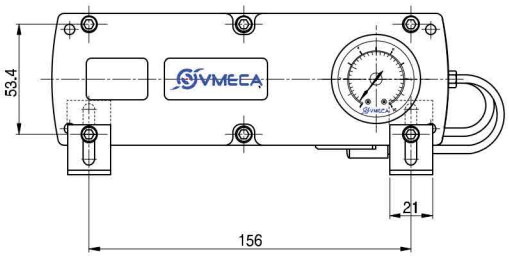

[Measure unit : mm]

(mm)

Model	L1	L2
VTM25	45.5	203.5
VTM50	45.5	203.5
VTM75	65	223
VTM100	65	223
VTM125	84.5	242.5
VTM150	84.5	242.5
VTM175	104	262
VTM200	104	262

Port 1 : G1/4″, NPT1/4″
Port 2 : G1/2″, G3/4″, G1″
NPT1/2″, NPT3/4″, NPT 1″
Port 3 : G3/4″

Port 1 : VTM25 ~ VTM150 : G1/4″, NPSF 1/4″
VTM175 ~ VTM200 : G3/8″, NPSF 3/8″
Port 2 : G1/2″, G3/4″, G 1″
NPT1/2″, NPT3/4″, NPT 1″
Port 3 : G3/4″

Dimensional Information

Air supply control valve
Vacuum release control valve
Digital display vacuum switch

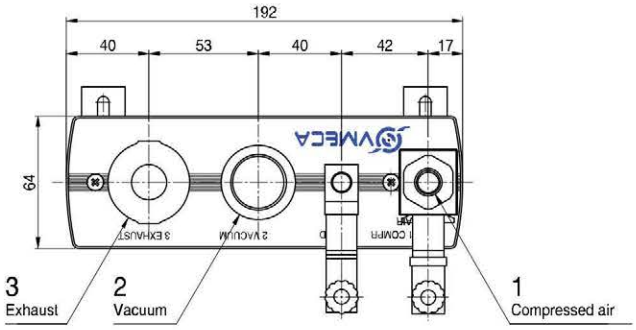

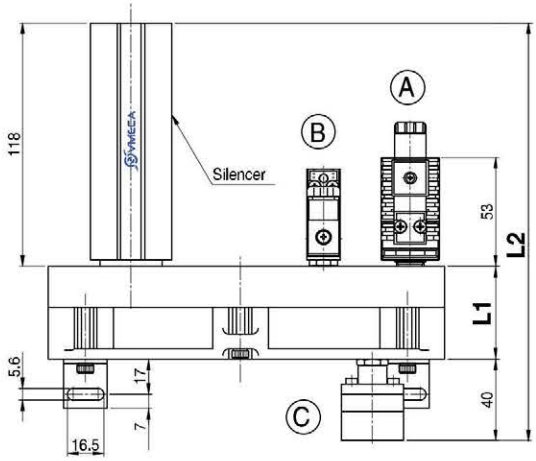

Ⓐ Air supply control valve
Ⓑ Vacuum release control valve
Ⓒ Digital display vacuum switch

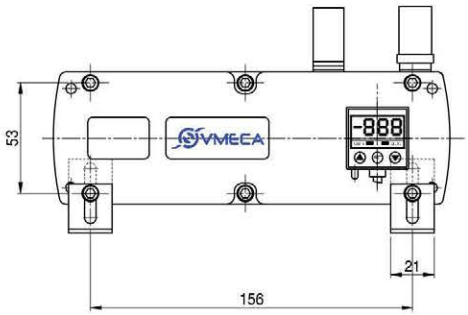

Port 1 : VTM25 ~ VTM150 : G1/4″, NPSF 1/4″
VTM175 ~ VTM200 : G3/8″, NPSF 3/8″
Port 2 : G1/2″, G3/4″, G 1″
NPT1/2″, NPT3/4″, NPT 1″
Port 3 : G3/4″

[Measure unit : mm]

(mm)

Model	L1	L2
VTM25	45.5	206.5
VTM50	45.5	206.5
VTM75	65	226
VTM100	65	226
VTM125	84.5	245.5
VTM150	84.5	245.5
VTM175	104	265
VTM200	104	265